ML253-5-D-LC

euroclamp

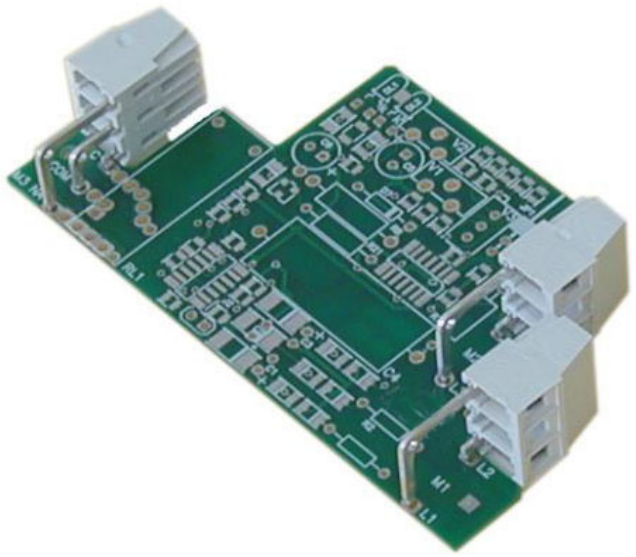

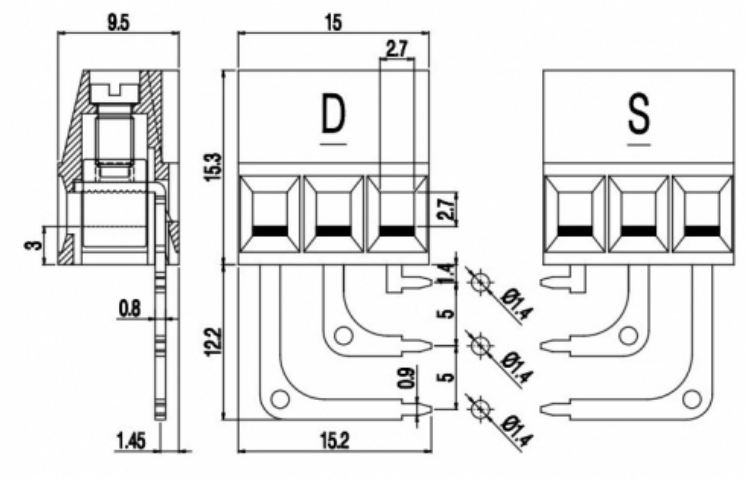

GENERAL INFORMATION

pitch:	5 mm
housing height:	15,30 mm
housing depth:	9.5 mm
dimensional class:	medium
wire section:	2.5 mm² / 14 AWG
clamp opening size:	2.7 × 2.7 mm
wire stripping:	max 7 mm
operating temperature:	-40°C ÷ +130°C

ELECTRICAL CHARACTERISTICS

current:	16A
voltage:	250V
test voltage:	2 kVrms/60s

MECHANICAL CHARACTERISTICS

screw:	M3
max. torque:	0.5 Nm / 4.5 in.lbs

APPROVALS DATA

	CSV	VDE	cULus
	EN 60998-1	-	UL 1059
current:	16A	-	15A factory / 15A field
voltage:	250V	-	300V
wire section:	2.5mm ^{2}	-	14÷30AWG
torque:	0.5Nm	-	4.5Lb-in
FILE:	CA02.01614	-	E178356

MATERIALS

housing:	PA - UL 94 V0
screw:	Galvanized steel
clamp/spring:	Nickeled copper alloy
terminal:	Tin-plated copper alloy

AVAILABLE COLOURS

GN GY (STD) BK BL RD YL OG

other colours: upon request

poles	P/N	pcs/pack	W [Kg]*	W [Kg]*
3	ML253-5-D-LC	N/A	N/A	N/A

Copyright ©2016 - euroclamp - http://www.euroclamp.it