SURFACE PANEL MOUNT APPLIANCE INLET: IND-325RWMAI-IP44

Technical Specification

Voltage	415V 50/60Hz
Amps	32 Amp
Poles	3P + N + E
IP Rating	IP44
Standard	CEE IEC 60309 (BS4343) Standard
Max cable diameter	25mm
Cable cross section	2.5 - 10mm²
Colour	Red

Dimensions

a	120
b	112
c	141
d	90.2
e	79
e1	98.5
f	5.5
g.	5
h	189
M	32

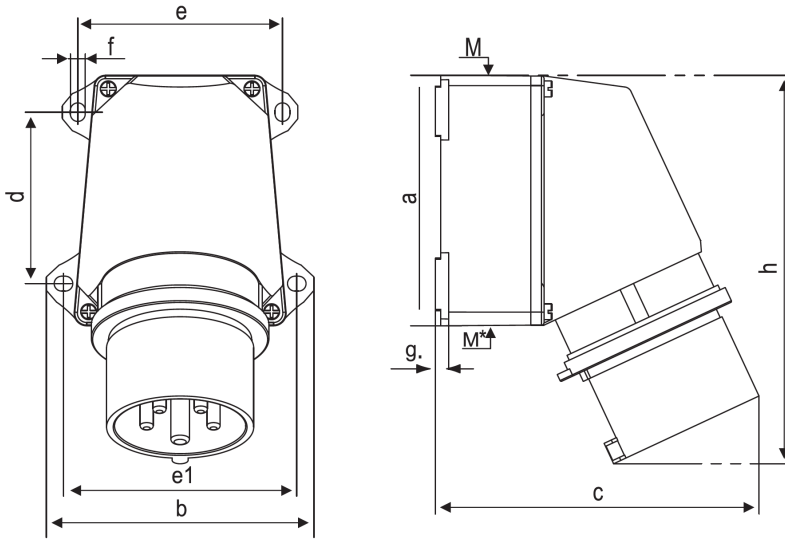

Switchtec Ltd Brooms Road Stone Business Park Stone Staffordshire ST15 0SH
call: 01785 818600 email: sales@switchtec.com web: switchtec.com