ANGLED PANEL SOCKET: IND-325RAPMS-IP44

Technical Specification

Voltage	415V 50/60Hz
Amps	32 Amp
Poles	3P + N + E
IP Rating	IP44
Standard	CEE IEC 60309 (BS4343) Standard
Cable cross section	2.5 - 10mm²
Colour	Red

Dimensions

a	100	g.	8
b	92	g.1	2
c	62	h	112
d	85	k	52
e	77	l	73
f	5.3	l1	86

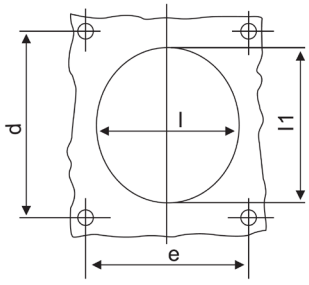

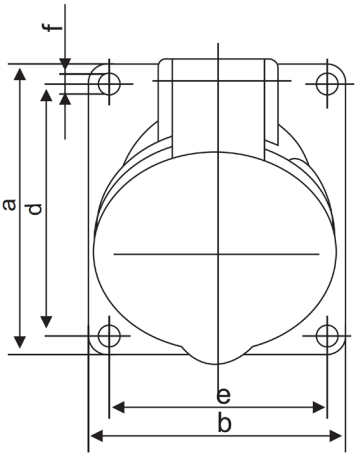

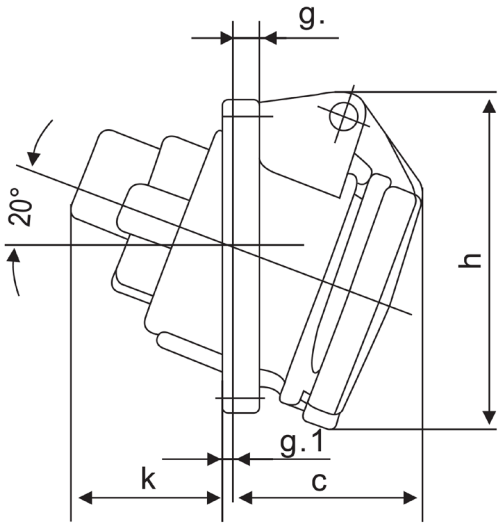

Switchtec Ltd Brooms Road Stone Business Park Stone Staffordshire ST15 0SH
call: 01785 818600 email: sales@switchtec.com web: switchtec.com