Panel Socket: IND-163BPMS-IP44

Technical Specification

Voltage	240V 50/60Hz
Amps	16 Amp
Poles	2P + E
IP Rating	IP44
Standard	CEE IEC 60309 (BS4343) Standard
Cable cross section	1.5 - 4mm²
Colour	Blue

Dimensions

a	75	g	8
b	75	g.1	2
c	54	h	68
d	60	h1	1
e	60	k	28
f	5.5	l	50

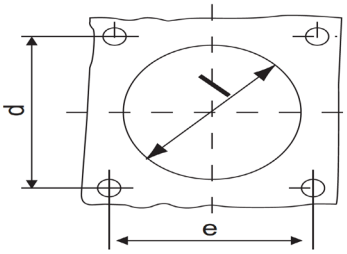

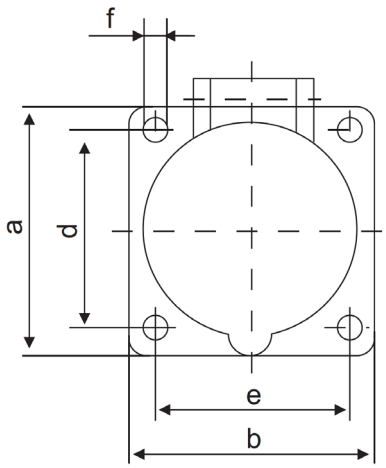

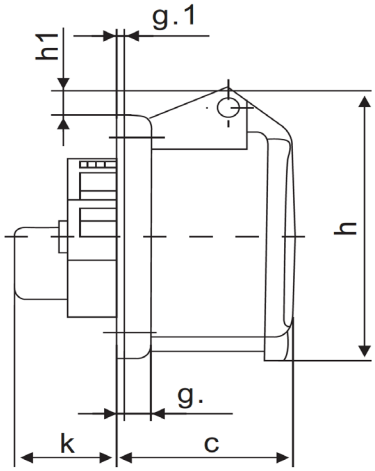

Switchtec Ltd Brooms Road Stone Business Park Stone Staffordshire ST15 0SH
call: 01785 818600 email: sales@switchtec.com web: switchtec.com